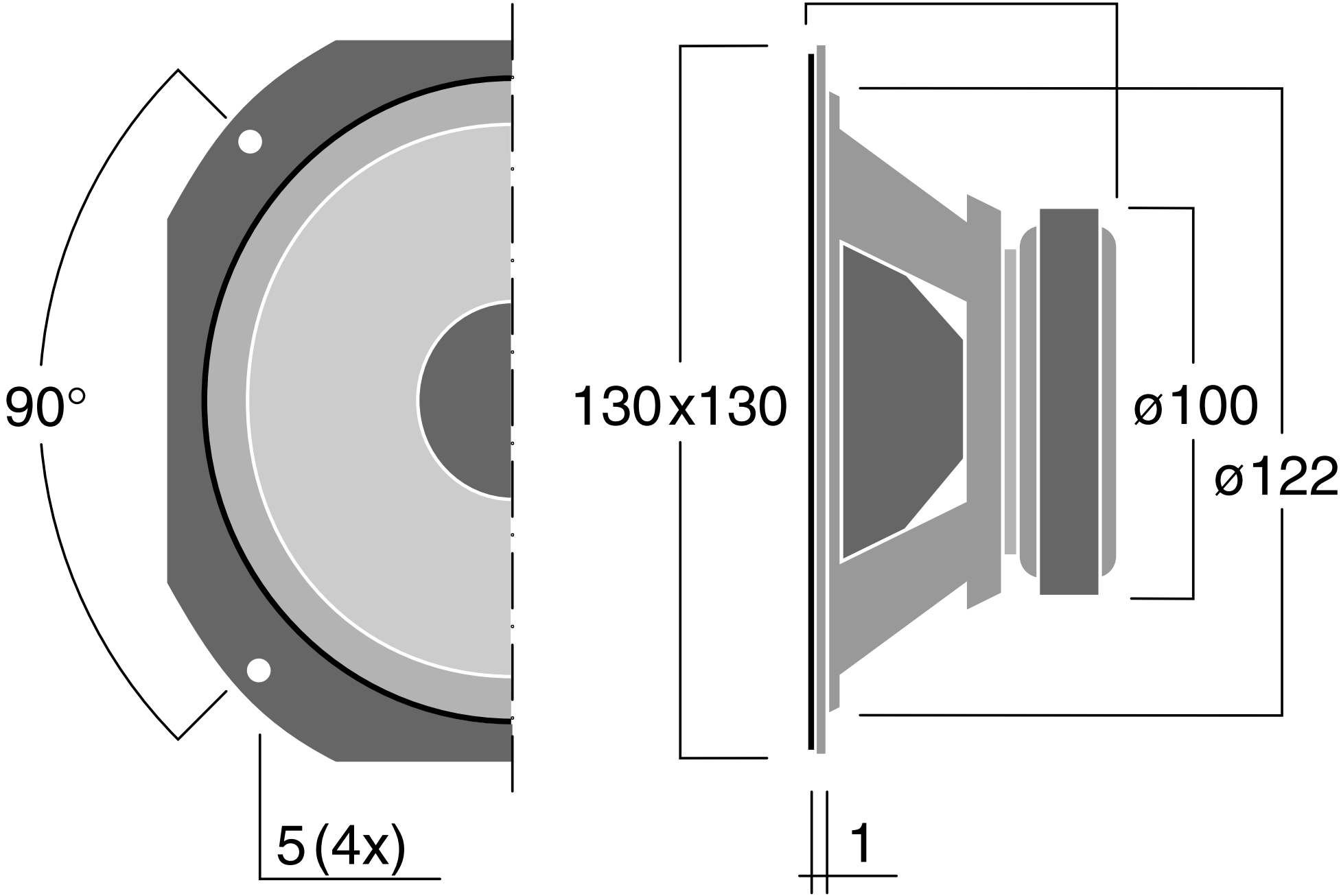SPH-68X/AD