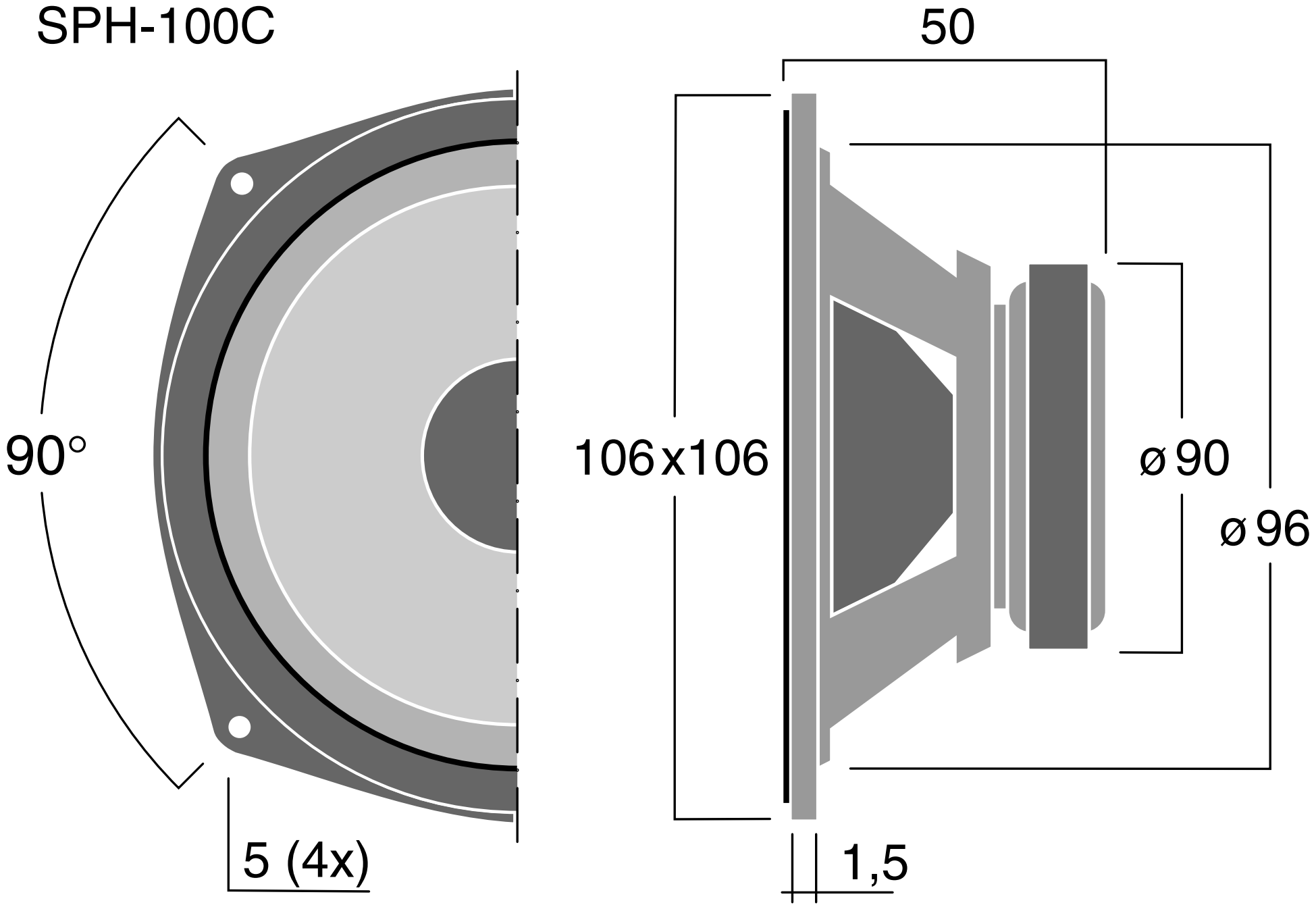SPH-100C